A Survey on Real Time Bidding Advertising

Yong Yuan[1,2], Feiyue Wang[1,2,3], Juanjuan Li[1,3], Rui Qin[1,3]

[1] The State Key Laboratory of Management and Control for Complex Systems,
Institute of Automation, Chinese Academy of Sciences, Beijing, China
[2] Qingdao Academy of Intelligent Industries, Qingdao, China
[3] Beijing Engineering Research Center of Intelligent Systems and Technology,
Institute of Automation, Chinese Academy of Sciences, Beijing, China
yong.yuan@ia.ac.cn; feiyue.wang@ia.ac.cn; juanjuan.li@ia.ac.cn; rui.qin@ia.ac.cn

***Abstract* —** Real-time bidding (RTB) is an emerging and promising business model for online computational advertising in the age of big data. Based on analysis of massive amounts of Cookie data generated by Internet users, RTB advertising has the potential of identifying in real-time the characteristic and interest of the target audience in each ad impression, automatically delivering best-matched ads, and optimizing their prices via auction-based programmatic buying scheme. RTB has significantly changed online advertising, evolving from the traditional pattern of "media buying" and "ad-slot buying" to "target-audience buying", and is expected to be the standard business model for online advertising in the future. In this paper, we discussed the current market practice of RTB advertising, presented the key roles and typical business processes in RTB markets, and summarized the current research progresses in the existing literature. The aim of this paper is to provide useful reference and guidance for future works.

***Keywords* —** *real-time bidding; computational advertising; online advertising; big data*

I. INTRODUCTION

Real-time bidding (RTB), as an emerging and promising business model of online advertising markets, represents the cutting edge frontier of the computational advertising research, and the third widely-used advertising paradigm following the display ad network and search-based keyword advertising. Via cookie-based online big data analysis, RTB has the potential of identifying the characteristic and interest of the target audience behind each ad impression, and then delivering best-matched ads accordingly. As such, RTB is widely regarded as a transformative innovation in online advertising markets, evolving from the traditional "media-buying" and "ad-slot buying" patterns to the big-data-driven "audience buying" pattern. In other words, RTB stepped from large-scale wholesale into customized retail when selling ad impressions, which significantly increases the precision and effectiveness of ad delivery technologies.

RTB advertising has experienced an explosive growth since its birth in recent years. On the international markets, it is reported that 88 percent of North-American advertisers have switched to RTB when buying ad impressions in 2011. Online RTB market size is expected to rise to 8.49 billion dollars in 2017, accounting for 29 percent of display advertising budgets. In China, the RTB market starts from the TANX system from taobao.com in 2011. It is reported that in 2013, the amount of RTB ad requests in China has reached 5 billion impressions, and advertisers' RTB budgets increased by 300% to 83 million dollars.

The typical business process of RTB ad delivery can be illustrated with an example shown in Figure 1: suppose an Internet user is browsing on the website of a publisher. Through cookie analysis, the data management platform (DMP) can identify the interests and characteristics of the user. When this user opens a webpage, an auction will be trigged once she inputs the URL and presses the enter key: The publisher will send the user information to the supply-side platform (SSP), who forwards the information to the Ad exchange (AdX). The AdX then further sends the user information to eligible demand-side platforms (DSPs). These DSPs, in turn, ask DMP and know that this user is a car enthusiast. So, each DSP sends the user information to its advertisers and starts an auction, where advertisers that sell cars can submit bids for the opportunity of showing ads to the user (i.e., the ad impression). The winner from each DSP auction will enter the second-round auction in the AdX. The highest bidder among all DSPs finally obtains the ad impression, and her ads will be fed back to the AdX and SSP, and displayed to the user on the webpages of the publisher. The business process, including audience identification, auction and ad display, will be finished in exactly 10 to 100 milliseconds, and hence it is named "real-time bidding".

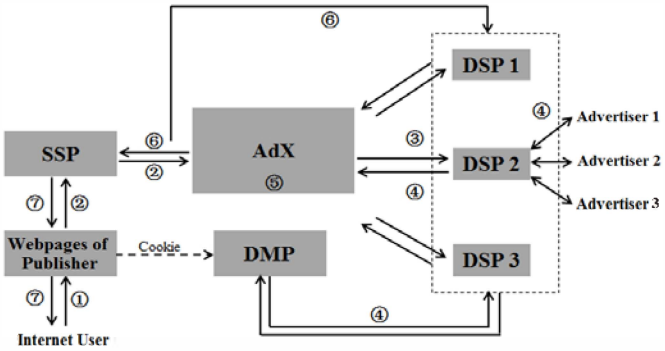

Figure 1. The Business Process of RTB Ad Delivery

For instance, using big-data analysis and its RTB architecture, a leading DSP company can process the Cookie data of more than 570 million Internet users, and characterize every Cookie with 3155 attribute labels. More than 3 billion ad impressions are sold by this DSP every day, and each ad impression is auctioned within 50 milliseconds. Via this cookie-based audience targeting technology, the RTB ads witnessed a 50 percent increase in the market efficiency and effectiveness. Obviously, it is big data analysis that makes the RTB ads more precise, controllable, and efficient, and also makes RTB a standard business model for the future online adverting markets.

From the above example, we can conclude that RTB advertising brings us the following two transformative innovations.

■*Programmatic ad buying and delivering driven by the big-data analysis technology*. The traditional pattern of offline contract negotiation on a bulk of ad impressions, evolved to a customized, fine-grained and audience-sensitive pattern of online automatic ad buying and delivering. This innovation takes the full advantage of the value of the rich data in online advertising markets, and also significantly increases the ad effectiveness.

■*Dynamic pricing scheme based on real-time auctions*. With respect to ad pricing, the traditional time-dependent and fixed-price negotiation has evolved to audience-based real-time auction scheme, which has the potential of facilitating the dynamic pricing and optimal allocation of ad resources. In other words, the auction-based pricing scheme can allocate each ad impression to the best-matched advertiser with an optimized price.

From an academic perspective, RTB advertising can enrich such areas as computational advertising, online marketing and auctions with interesting management issues caused by novel behavior, strategies or mechanisms. To date, the RTB research has lagged far behind the fast-growing market practice. However, much exploratory work has been done on RTB behavior analysis, auction mechanism design, yield optimization, etc. This motivates us to present this survey with a brief introduction to the current research progresses, with the aim at providing useful reference and guidance for future works.

The remainder of this paper is organized as follows: Section 2 presents the key roles and business process of RTB advertising. In section 3, we analyze the existing literature, and discuss in detail the key issues and current progresses in RTB research. Section 4 concludes our paper by presenting several key issues in RTB practice that still awaits future research.

II. Business Model of the RTB Markets

In this section, we briefly introduce the key roles in RTB markets and the typical business process of RTB ad delivery.

A. The Key Roles in RTB Markets

As can be seen in the example in Section 1, the key roles of the RTB market include the *advertiser, DSP*, *AdX*, *SSP*, *DMP* and *publisher*. Each role can be depicted as follows:

■ *Advertiser* is the buyer of ad impressions and the associated audiences. In RTB auctions, advertisers bid for ad impressions according to their marketing objectives, budgets, strategies, etc. The advertiser with the highest bid wins the ad impression.

■*DSP* is a comprehensive agency platform that helps advertisers optimize their strategies of ad management and delivery. Based on its big-data analysis and audience targeting technologies, as well as its RTB architecture and algorithms, DSP helps advertisers buy the best-matched ad impressions from AdXs in a simple, convenient and unified way.

■*AdX* is an ad exchange market that matches the buyers and sellers for each impression, similarly as a stock exchange market. AdX uses standardized protocols to pass the ad requests and user information among other roles in RTB markets, aiming at finding the best match of advertisers and their target audiences. Thus, it plays a critical role in RTB markets.

■*SSP* is an agency platform that helps publishers optimize the strategies of managing and pricing their ad inventory, including setting the optimal reserve prices, allocating ad impressions to different channels, etc.

■*DMP* is a data management platform that collects, stores and analyzes the cookie data of Internet users. DMP typically provides DSPs and AdXs with paid services of identifying their target audiences.

■*Publisher* is the owner of an online website. Each time a user visiting a publisher's webpage will trigger an impression, and the ad of the advertiser wining the RTB auction on this impression will be displayed on the publisher's webpages.

B. The Business Process of RTB Ad Delivery

As can be seen in Figure 1, the typical business process of RTB ad delivery can be depicted as follows[1].

①An Internet user visits the webpages of a publisher.

②If there is one or more ad slots to be sold in the RTB markets, the publisher will send an ad request to the SSP and AdX, containing the information of the user, ad slots, and reserve prices.

③ After receiving the ad request from SSP, AdX will forward all the information to eligible DSPs.

④Each DSP then parses the information in the ad request, asks the DMP about the necessary information of this user (e.g., its geographic position, gender, age, historical behavior, shopping interests and intentions, etc.), and starts an auction to matched advertisers. The ad of the winner advertiser will be fed back to the AdX, and each DSP must response within a specific time.

⑤ AdX starts an auction to winner advertisers from each DSP, and determines the highest bid among these winner advertisers. If this bid is lower than the publisher's reserve price, this RTB process will be terminated with the ad slots left empty or reassigned to non-RTB channels. Otherwise, the advertiser with the highest bid will finally win the ad impression.

⑥ AdX announces the auction result to all DSPs, and send the ads of the final winner advertiser to SSP.

⑦ SSP helps display the ads to the ad slots on the publisher's webpages in front of the users.

III. Key Issues and Current Research Progresses

As one of the most promising business models in big-data driven online advertising markets, RTB has attracted intensive research interests since its birth, and is widely considered as an emerging frontier in computational advertising research. In this section, we first analyze the existing RTB literatures, and then summarize the key issues and representative research works.

A. Literature Review

We use Google Scholar, ISI Web of Knowledge and EI Village as our data sources, and retrieve all literatures published from 2005 to 2014 with such keywords as "real time bidding, programmatic buying, ad exchange, etc." in the title. After carefully reading all literatures and filtering out those irrelevant ones, we

obtain 36 research papers (including 2 survey papers[2, 3]) focused on RTB advertising, using which we analyze the current research progress of RTB advertising.

TABLE I. KEY RESEARCH ISSUES IN RTB LITERATURES

	Advertiser & DSP	Publisher & SSP	AdX & DSP	RTB Markets
Market level		✧ Channel allocation[4-7]		✧ Evolution of market structure * ✧ Market segmentation[8]
Platform level	✧ Bidding algorithm[9-14]		✧ Mechanism design[1, 15-21] ✧ Callout optimization[22, 23]	✧ Ad performance predicting[24-27] ✧ Market specification and security[28, 29]
Individual level	✧ Behavior analysis[30-33] ✧ Frequency capping* ✧ Budget allocation[34]	✧ Inventory pricing[35, 36]	✧ Market Information structure*[37]	

As shown in Table 1, we can draw three conclusions on RTB research status from the quantity, research topics and research subjects of the investigated literatures, respectively. First, from the viewpoint of quantity, we can see that as an emerging market and research filed, RTB-related literatures are still immethodical and unsystematic, with only a few papers on each topic. Second, from the viewpoint of research topic, although RTB is widely considered as a big-data-and-IT driven business model, the existing works focus mainly on operational management issues related to behavior, strategy, mechanism and structure of RTB markets, while less on IT-based audience targeting and ad serving technologies. Third, from the viewpoint of research subjects, we can see that the research hotspots are entirely driven by the evolution of RTB markets, focusing on key issues of the AdX, DSP and SSP platforms that successively emerged in RTB markets.

B. Key Research Issues and Current Progresses

Much research work has been done in recent years to effectively manage the emerging RTB markets. The key research issues cover a wide range of topics from the microscopic bidding behavior analysis and strategy optimization, ad inventory pricing and channel allocation, to the business model and mechanism design, and to the macroscopic market segmentation and ad performance analysis. In this section, we will discuss the current research progresses on these key issues.[1]

Bidding Behavior Analysis and Strategy Optimization

In RTB markets, advertisers and DSPs constitute the demand side of ad resources (e.g. ad slots and impressions), seeking to buy best-matched ad impressions via real-time auctioning and bidding. In literatures, bidding behavior analysis and strategy optimization for advertisers and DSPs attract intensive interests.

Advertisers must determine the bid price for each ad impression in RTB auctions. Essentially, RTB auction can be regarded as a DSP-intermediated two-stage auction: in order to win the ad impression, an advertiser must win the first auction organized by their DSP, and then win the second auction among DSPs organized by AdX [1]. The bidding behavior and equilibrium in such intermediated auctions are particularly interesting for researchers, and have the potential to help predict both the microscopic ad price and the macroscopic market stability[32]. As such, Feldman *et al.* investigated advertisers' equilibrium behavior and incentive mechanism in the RTB auctions. They found that the two-stage resale auction will lead to a new characteristic that revenue-maximizing DSPs use an auction with a randomized reserve price chosen from an interval[31, 33]. Santiago *et al.* introduced a novel notion of Fluid Mean Filed Equilibrium (FMFE) that is behaviorally appealing, computationally tractable, and in some cases yields a closed-form characterization. The FMFE combines the mean field approximation and stochastic fluid approximation so as to address the limitations of the frequently-used perfect Bayesian equilibrium in large markets, and can provide a good approximation to the rational behavior of budget-constrained bidders in AdXs [30].

A most important research issue for DSP is the design of effective bidding algorithms. As a proxy of advertisers in RTB markets, a DSP is faced with the task of selecting the appropriate ad impressions and determining their optimal bid prices under budget constraints, aiming at maximizing the ad performance (e.g., the number of ad impressions, clicks or conversions)[11]. The bid pricing decisions typically are made in real time within 10-100 milliseconds, and therefore most bidding algorithms are composed of an offline component for bidding strategy optimization and an online algorithm that simply executes the offline pre-computed strategies. In literatures, Chen *et al.* formulated the impression-level bid pricing issue as a constrained optimization problem that maximizes revenue subject to constraints such as budget limits and inventory availability. Based on a linear programming prime-dual formulation, they designed a bidding algorithm that enables fine-grained impression valuation, and adjusts value-based bid according to real-time constraints. This online algorithm can guarantee the offline optimality given the same level of knowledge an offline optimization would have[14]. Arpita *et al.* examined the problem of acquiring a given number of impressions with a given target spend, when the highest external bid in the marketplace is drawn from an unknown distribution [10]. They designed offline bidding algorithms with good performance for both the fully information setting and the partially observable setting in RTB auctions. Meanwhile, since the design of bidding strategies typically depends heavily on the prediction of the distribution of future bid prices, Lang *et al.* investigated the optimum strategy of the bidding agency when faced with incorrect forecasts, which can be addressed via tightening the loop between successive offline optimization cycles[13]. Claudia *et al.* presents a bid-optimization approach based on supervised learning algorithms and second-price auction theory. This approach is shown to be effective in matching impressions to audience, and has been practically used in the Media6Degreed platform[12].

To summarize, although the above key issues for DSP and advertisers attract intensive research interests, the existing efforts failed to integrate the individual-level behavior analysis and the system-level strategy optimization. The proposed bidding algorithms for DSPs are typically generic optimization approaches via learning from historical data, aiming at maximizing DSPs' own revenue, instead of individual advertisers' revenue. As a result, the proposed bidding algorithms do not take into consideration of 1)the heterogeneity and diversity of advertisers' behavior; 2) the principle-agent relationship between advertisers and

[1] It is worth noting that the issues marked with asterisks in Table 1 are not studied by the existing work. We will discuss those issues as future work in Section IV.

DSPs, and their behavioral patterns and incentive mechanisms; and 3) DSP's equilibrium behavior and its stable state in RTB auction games. Generally speaking, behavioral pattern is an important input variable for bidding algorithm design, and different behavioral patterns might lead to totally different bid prices. For instance, advertisers seeking to maximize the brand awareness are more inclined to follow a competitive behavioral pattern, typically bidding extremely high for more impressions. As such, the behavioral patterns of individual advertisers and DSPs' should be taken into consideration for designing effective bidding algorithms.

In addition to bidding strategies, budget allocation is also a key decision for advertisers, who need to allocate their advertising budgets among several channels, DSP agencies and campaigns. Researchers have done much work on strategy design and optimization for budget allocation in other advertising forms such as ad networks and keyword advertising, but have yet not identified novel research questions for RTB budget allocation. The related study is still nonexistent, except that Lee *et al.* presented an online allocation approach with smooth budget consumption and maximized ad conversions[34].

Inventory Pricing and Channel Allocation

In RTB markets, publishers and SSPs constitute the supply side of ad resources. Their key decisions, such as inventory pricing and multi-channel allocation of ad impressions, are major research topics in literatures.

On one hand, publishers and SSPs need to set the reserve price for each impression and submit it to AdXs. The reserve price is the lowest price for publishers to sell the impression. Generally speaking, a high price may increase the risk that the impression cannot be sold, while a low price is not affordable for the publisher. As such, researchers seek to design algorithms for optimizing ad reserve prices. For instance, Radovanovic *et al*. presented a dynamic algorithm for pricing ad inventory, which can maximize publishers' revenue via iterative price adjustments in the direction of the gradient of an appropriately constructed Lagrangian relaxation[35]. Fridgeirsdottir *et al*. investigated the optimal strategy for pricing ad inventory in case of uncertain demand and supply. They found that the general heuristics to convert between the CPC (Cost-Per-Click) and CPM (Cost-Per-Mille) pricing schemes may be misleading as it may incur a significant amount of revenue loss for publishers. They also found that the optimal CPC prices can increase in the number of slots, which is counter-intuitive to the supply-demand relationship[36].

On the other hand, multiple channels (e.g., online channels of RTB, ad networks, and keyword auctions, and offline channels of contract negotiation) are usually available for publishers and SSPs when selling their ad impressions. Formally, premium ad inventory is always sold via ad networks or offline negotiations, while remnant inventory is left for RTB markets. With the effectiveness of RTB advertising is widely recognized by practitioners, publishers and SSPs are more inclined to sell premium ad impressions via RTB platforms. As such, how to predict the ad prices and allocate ad impressions among multiple channels accordingly has been intensively studied with the aim to maximize the revenue of publishers and SSPs[5, 6]. For instance, Balseiro *et al*. formulated the inventory allocation strategy as a stochastic control problem, and designed an efficient policy for online ad allocation[7]. Walsh *et al*. proposed an approach for automatically partitioning inventory into abstract channels[4], and develop a suite of techniques based on column and constraint generation that effectively tackle the channel explosion.

Compared with the DSP and AdX, SSP represents a new kind of market role emerging in RTB advertising. Its business model and workflow is still far from maturity and standardization, so that less research attention has been paid to the yield optimization for publishers and SSPs. Generally speaking, there are two new features for the decisions of inventory pricing and channel allocation in RTB markets: First, the inventory pricing scheme has evolved from the former offline negotiation on a bulk of ad impressions to online programmatic pricing for each individual impression, which leads to much more fine-grained and uncertain decisions. Second, as for the channel allocation, publishers and SSPs typically need to set aside the ad impressions for offline contracts to avoid default, so that the channel optimization decisions must first satisfy a rigid constraint of offline capacity of impressions, and second a soft constraint of matching advertisers to proper target audiences. These new features in RTB markets pose great challenge to the research for publishers and SSPs, and future works are awaited to tackle these challenges.

Business Model and Mechanism Design

Similarly working like the stock markets, AdX can bridge the gap in RTB markets by matching advertisers to publishers via real-time auctions[1, 17, 21]. The existing works are focused on the design of the business model and auction mechanisms of AdXs and DSPs.

Essentially, the RTB auction can be categorized into the single-item multi-person auction. Myerson has proved that its optimal mechanism is second-price sealed-bid auction (a.k.a., Vickery auction), in which the highest bidder wins by truthfully bidding its value, but pays the second-highest bid[38]. As such, most of the AdX platforms are now using the Vickery auction. However, because there are two stages in RTB auctions, i.e., a DSP-advertisers stage and a AdX-DSP stage, there is no incentive for a DSP to truthfully submit all bids from her advertisers (especially the second-highest bid), which may lead to a decreased revenue for AdXs [2]. In order to tackle this problem, a novel mechanism called "optional second-price" (OSP) auction is designed and practically used by Google DoubleClick system. In OSP auctions, a DSP need to submit both the top two bids of her advertisers. Mansour *et al*. proved that OSP mechanism can force advertisers to truthfully report their bids and thus reduce AdX's revenue loss due to the information asymmetry [19]. Besides such practically used mechanisms as Vickery and OSP, researchers also designed in theory a hybrid BIN-TAC mechanism that works as follows. Impressions are auctioned with a high buy-it-now (BIN) price. If one single advertiser is willing to pay the price, she gets the impression with the BIN price. Otherwise, a second-price auction is held among advertisers that can afford the BIN price. Also, if no advertiser can afford the BIN price, a "take-a-chance (TAC)" auction is held among the top d advertisers and the impression is randomly awarded to one of them at the $(d+1)^{st}$ price [16]. BIN-TAC mechanism is proved to be able to increase the revenue of AdX platforms.

Callout optimization is another mechanism design issue in RTB markets. When receiving the ad requests from publishers and

SSPs, AdX need to forward them to DSPs according to the information encapsulated in requests. Due to the resource constraints (i.e., limited bandwidth), DSPs may not have to bid for all impressions. Thus, designing an online algorithm to choose the appropriate DSPs for each impression with the aim of maximizing the market efficiency or AdXs' revenue is a key issue, which is called the "callout optimization" problem. In literature, Chakraborty *et al*. presented an algorithm that runs in almost linear time per auction, and guarantees roughly at least 1−1/e of the expected maximum market efficiency achievable by any algorithm that obeys the callout constraints [23]. Lang *et al*. extends the callout optimization problem into more general ad serving cases, and proposed two algorithms that can compute, with low latency, an optimal path through a directed graph representing the business arrangements between the hundreds of thousands of business entities in an AdX platform. These algorithm have been successfully used in Yahoo! ad server [22].

In RTB auctions, DSPs are both the auctioneer to advertisers and the bidder to AdX, which makes the mechanism design for DSPs an interesting research issue. In literature, Lampros *et al*. compared the revenue and efficiency of three auction mechanisms for DSPs in a single-AdX setting, i.e., the first-price sealed-bid auction and two variations of the Vickrey auction, and derived interesting insights as for their performance under different scenarios [15]. Also, DSPs can use different payment schemes in RTB auctions, e.g., buying impressions from AdXs using CPM scheme and selling them to advertisers using either CPC or CPM scheme. It has been observed that almost all risk-averse advertisers will select the CPC scheme. Ruggiero *et al*. analyzed DSPs' arbitrage problem, examined the incentives of advertisers and arbitragers, and proposed an efficient mechanism with truthful bidding by advertisers and truthful reporting of click predictions by arbitragers[18].

We can draw a conclusion from the existing works that mechanism design for both AdXs and DSPs is still a challenging issue. Particularly, the equilibrium strategies and behavioral dynamics of the two-stage RTB auction games are still not sufficiently studied. As a result, most of the AdXs and DSPs have to use the Vickrey auction that is proved optimal only for single-stage auctions. Furthermore, due to the lack of effective approaches for evaluating auction mechanisms, it is typically difficult for researchers to evaluate new mechanisms. As such, many open problems still await future research. For instance, is there an optimal mechanism for the two-stage RTB auction? What kind of equilibrium behavior and dynamics may emerge in RTB markets if different kinds of mechanisms were used in two auction stages? How to design incentive compatible mechanisms to facilitate truthful bidding? How to design an optimal revenue-sharing mechanism for RTB markets to promote cooperation among AdXs, DSPs and SSPs, etc. [20]?

Market Segmentation and Ad Performance Analysis

Big-data-driven precise targeting is widely considered as a key component guaranteeing the effectiveness of the RTB markets. Via designing the audience classification category and attribute labels, DSPs can divide the Internet users into large amounts of niche markets with different kinds of demographic characteristics or shopping interests, and display best-matched ads accordingly [8]. Although this market segmentation can help increase the accuracy of ad delivery and advertisers' values in RTB auctions, it may decrease the market competition among advertisers[39, 40]. For instance, empirical research shows that most impressions sold in Microsoft AdECN platform can only be matched to one to three advertisers. Those impressions that is matched to exactly one advertiser will be sold at their reserve prices (may be zero). This significantly reduces the revenue of AdXs and DSPs, who as a result have no incentives to segment their target audiences via big-data analysis[16]. In literature, it has been empirically proved that the average price of impressions first rises and then drops with market segmenting[16]. As such, determining the optimal granularity for segmenting the RTB markets has great research and practical significance.

The lack of an effective way to evaluate the ad performance is an inherent limitation for online display advertising, and so it is with the RTB advertising. In order to tackle this problem, Yuan *et al*. empirically observed that periodic patterns might exist in various kinds of statistics including ad impressions, clicks, bids, and conversion rates (including post-view and post-click conversions), which suggests that time-dependent models would be appropriate for capturing these repeated patterns of ad performance in RTB markets [27]. Azimi *et al*. empirically determined 43 visual features related to the ad CTRs [24], and presented a novel model for predicting the CTRs based on the ads' multimedia features. This model is particularly useful in predicting the performance of new ads[25]. Romer *et al*. proposed a model for predicting the conversion rates in case when RTB ads are clicked[26], and so on.

IV. CONCLUSIONS

As a novel programmatic ad buying scheme, RTB advertising has shown strong and steady growth in recent years. However, compared with the fast-growing market practice, RTB research is still in its infancy. In this paper, we briefly introduce the key roles and business process of the RTB markets, and summarize the current research progresses in the existing literatures, aiming at providing useful reference and guidance for future works. To the best of our knowledge, our paper is the first survey on the RTB research that covers the key issues on DSPs, SSPs and AdXs, etc.

Many challenging issues in the RTB practice still awaits future studies. Due to page limit, here we briefly list several open problems as follows.

■ *Evolutionary dynamics and stability of RTB market structure.* Due to its long industrial chain with various kinds of economic entities, the RTB market is shown to be highly dynamic and far from stabilization and standardization. For instance, many DSP and SSP companies are now building their own AdX platforms. From an industrial perspective, if an economic entity can benefit from being both DSP and AdX, then market reorganizations are expected to occur in RTB markets. As such, studying the complex competitive or cooperative games among DSPs, SSPs and AdXs, as well as the evolutionary dynamics of these games and the resulting stable market structures, is of significant practical and research values.

■ *Asymmetry information issue.* Due to inherent competitions among the entities in RTB markets, information (e.g., user profiles, bids, ads, etc.) might be distorted or hidden when passing

from one entity to another, causing the asymmetry information issue. For instance, as an agency platform, DSP usually knows the user information while advertisers do not know. However, DSPs typically make decisions to maximize their own revenue instead of advertisers' revenue. In RTB practice, if a DSP maliciously mismatches advertisers with impressions, it will benefit but lower advertisers' revenue. If an AdX intentionally hides the publisher information of impressions, an adverse selection effect is expected to occur in RTB markets, causing the emergence of private AdXs. So this issue needs to be studied.

■ *Optimization of frequency capping strategy*. Determining the optimal number of times showing an ad to a specific user, also called frequency capping, is an important decision for DSP and advertisers. In RTB advertising, it is now possible to precisely control the frequency to each cookie on a specific device and in a specific period of time. Successful design of the optimal frequency capping strategies on the fine-grained impressions (instead of on the website or ad slots in previous works) will increase the effectiveness of RTB advertising and avoid wasting advertisers' budgets.

ACKNOWLEDGMENT

This work is partially supported by NSFC (#71472174, #71102117, #71232006, #61233001) and the Early Career Development Award of SKLMCCS (Y3S9021F36, Y3S9021F2K).

REFERENCES

1. Muthukrishnan, S., *AdX: a model for ad exchanges*. ACM SIGecom Exchanges, 2009. **8**(2): p. 9.
2. Muthukrishnan, S., *Ad exchanges: Research issues*. Internet and network economics, 2009: p. 1-12.
3. Yuan, S., et al., *Internet Advertising: An Interplay among Advertisers, Online Publishers, Ad Exchanges and Web Users*. arXiv preprint arXiv:1206.1754, 2012.
4. Walsh, W.E., et al. *Automated channel abstraction for advertising auctions*. 2010.
5. Mostagir, M. *Optimal delivery in display advertising*. 2010. IEEE.
6. Chen, Y.-J., *Optimal dynamic auctions for display advertising*. 2009, UC Berkeley Working Paper.
7. Balseiro, S., et al., *Yield optimization of display advertising with ad exchange*. Arxiv preprint arXiv:1102.2551, 2011.
8. Lahaie, S., D.C. Parkes, and D.M. Pennock. *An expressive auction design for online display advertising*. 2008.
9. Schain, M. and Y. Mansour, *Ad Exchange–Proposal for a New Trading Agent Competition Game*, in *Agent-Mediated Electronic Commerce. Designing Trading Strategies and Mechanisms for Electronic Markets*. 2013, Springer. p. 133-145.
10. Arpita, G., et al., *Adaptive Bidding for Display Advertising*, in *the 18th International World Wide Web Conference*. 2009: Madrid, Spain.
11. Balakrishnan, R. and R.P. Bhatt, *Real-Time Bid Optimization for Group-Buying Ads*. Arxiv preprint arXiv:1206.0469, 2012.
12. Claudia, P., et al., *Bid Optimization and Inventory Scoring in Targeted Online Advertising*, in *The 18th ACM SIGKDD Conference on Knowledge Discovery and Data Mining*. 2012: Beijing, China.
13. Lang, K.J., B. Moseley, and S. Vassilvitskii. *Handling forecast errors while bidding for display advertising*. in *21st Annual Conference on World Wide Web, WWW'12, April 16, 2012 - April 20, 2012*. 2012. Lyon, France: Association for Computing Machinery.
14. Chen, Y., et al. *Real-time bidding algorithms for performance-based display ad allocation*. 2011. ACM.
15. Stavrogiannis, L.C., E.H. Gerding, and M. Polukarov. *Auction mechanisms for demand-side intermediaries in online advertising exchanges*. in *Proceedings of the 2014 international conference on Autonomous agents and multi-agent systems*. 2014. International Foundation for Autonomous Agents and Multiagent Systems.
16. L.Elisa, C., et al., *Buy-it-now or Take-a-chance: A New Pricing Mechanism for Online Advertising*. Working Paper, 2012.
17. R.Preston, M., *The Design of Advertising Exchanges*. Review of Industrial Organization, 2011. **39**(3): p. 169-185.
18. Cavallo, R., P. McAfee, and S. Vassilvitskii, *Display Advertising Auctions with Arbitrage*. unpublished MS, 2012.
19. Mansour, Y., S. Muthukrishnan, and N. Nisan, *Doubleclick Ad Exchange Auction*. Arxiv preprint arXiv:1204.0535, 2012.
20. Gomes, R. and V. Mirrokni. *Optimal revenue-sharing double auctions with applications to ad exchanges*. in *Proceedings of the 23rd international conference on World wide web*. 2014. International World Wide Web Conferences Steering Committee.
21. McAfee, R.P. and S. Vassilvitskii, *An Overview of Practical Exchange Design*.
22. Lang, K., et al. *Efficient online ad serving in a display advertising exchange*. in *Proceedings of the fourth ACM international conference on Web search and data mining*. 2011. ACM.
23. Chakraborty, T., et al., *Selective call out and real time bidding*. Internet and Network Economics, 2010: p. 145-157.
24. Azimi, J., et al. *The impact of visual appearance on user response in online display advertising*. in *21st Annual Conference on World Wide Web, WWW'12, April 16, 2012 - April 20, 2012*. 2012. Lyon, France: Association for Computing Machinery.
25. Cheng, H., et al. *Multimedia features for click prediction of new ads in display advertising*. in *18th ACM SIGKDD International Conference on Knowledge Discovery and Data Mining, KDD 2012, August 12, 2012 - August 16, 2012*. 2012. Beijing, China: Association for Computing Machinery.
26. Romer, R., C. Haibin, and M. Eren, *Post-click Conversion Modeling and Analysis for Non-guaranteed Delivery Display Advertising*, in *the 5th ACM International Conference on Web Search and Data Mining*. 2012: Seattle, Washington, USA. p. 293-302.
27. Yuan, S., J. Wang, and X. Zhao. *Real-time bidding for online advertising: Measurement and analysis*. in *7th International Workshop on Data Mining for Online Advertising, ADKDD 2013 - Held in Conjunction with SIGKDD 2013, August 11, 2013 - August 11, 2013*. 2013. Chicago, IL, United states: Association for Computing Machinery.
28. Stone-Gross, B., et al. *Understanding fraudulent activities in online ad exchanges*. in *Proceedings of the 2011 ACM SIGCOMM conference on Internet measurement conference*. 2011. ACM.
29. Angel, S. and M. Walfish. *Verifiable auctions for online ad exchanges*. in *ACM SIGCOMM 2013 Conference on Applications, Technologies, Architectures, and Protocols for Computer Communication, SIGCOMM 2013, August 12, 2013 - August 16, 2013*. 2013. Hong Kong, China: Association for Computing Machinery.
30. Balseiro, S.R., O. Besbes, and G.Y. Weintraub. *Auctions for online display advertising exchanges: approximations and design*. in *ACM Conference on Electronic Commerce*. 2013.
31. Feldman, J., et al. *Auctions with intermediaries*. in *ACM Conference on Electronic Commerce*. 2010. ACM.
32. Ying, C., et al., *Bid Landscape Forecasting in Online Ad Exchange Marketplace*, in *the 17th ACM SIGKDD International Conference on Knowledge Discovery and Data Mining*. 2011: San Diego, California, USA. p. 265-273.
33. Ghosh, A., et al., *Bidding for representative allocations for display advertising*. Internet and Network Economics, 2009: p. 208-219.
34. Lee, K.-C., A. Jalali, and A. Dasdan. *Real time bid optimization with smooth budget delivery in online advertising*. in *7th International Workshop on Data Mining for Online Advertising, ADKDD 2013 - Held in Conjunction with SIGKDD 2013, August 11, 2013 - August 11, 2013*. 2013. Chicago, IL, United states: Association for Computing Machinery.
35. Radovanovic, A. and W.D. Heavlin, *Risk-aware revenue maximization in display advertising*, in *the 21st International World Wide Web Conference*. 2012, ACM: Lyon, France. p. 91-100.
36. Fridgeirsdottir, K. and S. Najafi-Asadolahi, *Cost Per Click Pricing for Display Advertising*. 2011, Working Paper, London Business School, London, UK.